SELWOOD SPIRAL SLIDE – A24573E

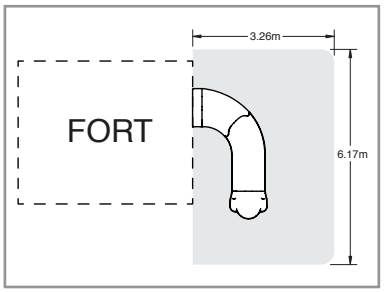

WARNING To reduce the risk of serious injury or death, you must read and follow these instructions. Keep and refer to these instructions often and give them to any future owner of this play system. Manufacturer contact information provided below.

OBSTACLE FREE SAFETY ZONE - **3.26 x 6.17 m** area requires Protective Surfacing. See page 3.

MAXIMUM VERTICAL FALL HEIGHT - **1.8 m**

CAPACITY - **1** User Maximum, Ages **3** to **10**; Weight Limit **110 lbs. (49.9 kg)** per child.

RESIDENTIAL HOME USE ONLY. Not intended for public areas such as schools, churches, nurseries, day cares or parks

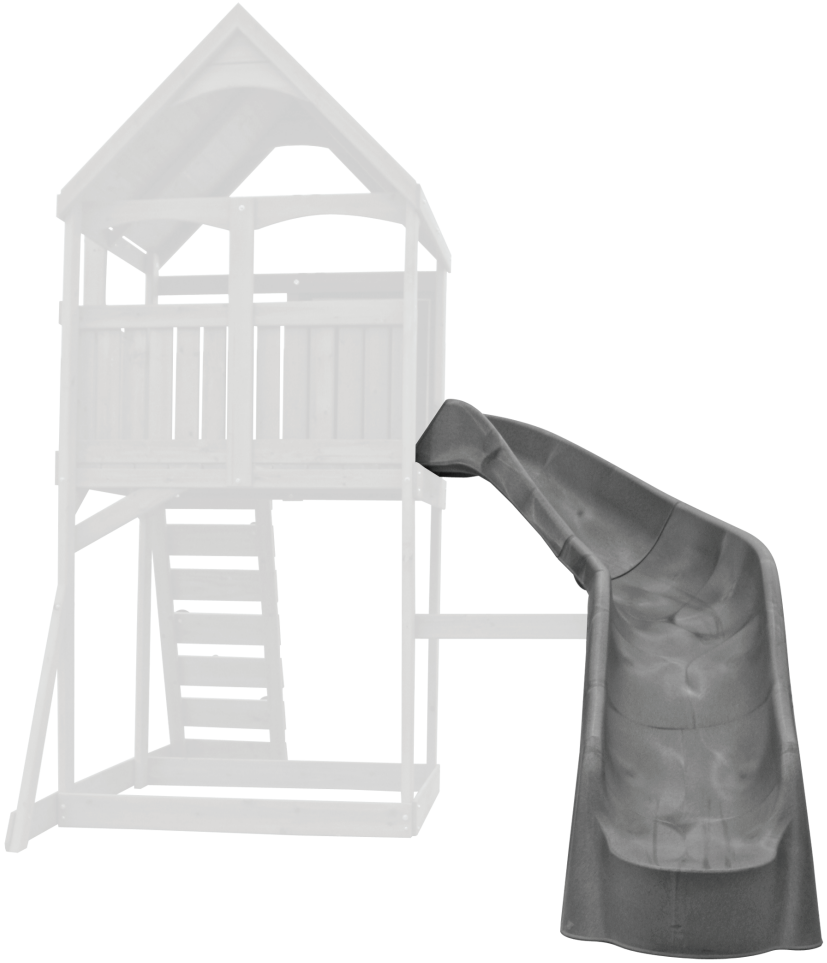

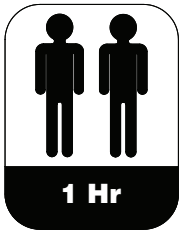

Two person assembly

Solowave Design
375 Sligo Rd. West, PO Box 10
Mount Forest, ON Canada N0G 2L1
Toll Free: 1-877-966-3738
support@solowavedesign.com

United Kingdom
Toll Free: 0870 145 2145
Email: info@selwoodproducts.co.uk

Other Countries:
Please refer to label affixed to outside of carton. The 1-877 number on the Owners Manual & Safety Instructions is for North America only.

Table of Contents

Warnings and Safe Play Instructions . . . . . pg. 2
Protective Surfacing Guidelines . . . . . pg. 3
Instructions for Proper Maintenance . . . . . pg. 4
About Our Wood – Limited Warranty . . . . . pg. 5
Keys to Assembly Success . . . . . pg. 6
Part ID . . . . . pg. 7
Installation of I.D./Warning Plaque . . . . . Final Step

3404573E

Rev 02/28/2011

Important Information: Please ensure page is read

ABOUT OUR WOOD

Solowave Design™ uses only Premium playground lumber, ensuring the safest product for your children's use. Although great care has been taken in selecting the best quality lumber available, wood is a product of nature and susceptible to weathering (changes in the aesthetics of the wood). A light sanding may be required to remove minor splinters. For your information, we have described some changes that may occur as a result of weathering:

1. Checking Checks are surface cracks in the wood along the grain. 4" x 4" material will experience more checking than 2", 1-1/4" or 1" material be cause the surface and interior moisture content will vary more widely than in thinner wood.

2. Warping Warping refers to any distortion (twisting, cupping) from the true plane that may take place during weathering.

3. Fading Wood exposed to sunlight, will over time, turn a grey color.

Note: The above changes will not affect the strength of the product

What causes weathering?

One of the main reasons for weathering is the effects of water (moisture); the moisture content of the wood at the surface is different than the interior of the wood. As the moisture moves in or out of the wood (result of climate changes), the different moisture content causes tension in the wood, which can result in checking and/or warping.

Due to changes in the climate moisture moves in and out of the wood

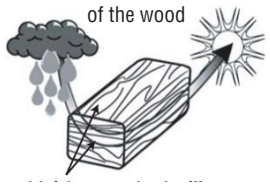

Moisture content will vary throughout any piece of wood

How can I reduce the amount of weathering to my Play System?

At the factory we have added water repellent to the stain. This water repellent decreases the amount of water absorption during rain or snow thus decreasing the tension in the wood. Sunlight will break down the water repellent, so we recommend applying a water repellent on a yearly basis (see your local stain and paint supplier for a recommended product). Also if storing the product before installation, make sure you store out of direct sunlight in a cool dry place.

Will weathering affect the strength of my Play System?

Most weathering is just the normal result of nature and will not affect safe play and enjoyment for your child. However if you are concerned that a part has experienced a severe weathering problem please call our consumer relations department for further assistance.

Tools Required

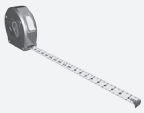

Measuring Tape

Drill

Safety Glasses

Level

#2 Robertson and #1 Phillips

Ratchet 1/2", 7/16" & 9/16"

Square Ruler

Limited Warranty

Solowave Design Inc. warrants that this product is free from defect in materials and workmanship for a period of one year from the original date of purchase. This warranty applies to the original owner and registrant and is non-transferable.

Regular maintenance such as periodic re-staining, retightening of screws is required to assure maximum life of your Play House.

This Limited Warranty does not cover:
- Labor for replacement of any defective item(s);
- Incidental or consequential damages;
- Cosmetic defects which do not affect performance or integrity;
- Vandalism; improper use or installation; acts of nature;
- Minor twisting, warping, checking, or any other natural occurring properties of wood that do not affect perfor mance or integrity.

Big Backyard products have been designed for safety and quality. Any modifications made to the original product could damage the structural integrity of the unit leading to failure and possible injury. Solowave Design Inc. cannot assume any responsibility for modified products. Furthermore, modification voids any and all warranties.

This product is warranted for RESIDENTIAL USE ONLY. Under no circumstance should a Big Backyard Play House be used in public settings such as schools, churches, playgrounds, parks, day cares and the like. Such use may lead to product failure and potential injury. Any and all public use will void this warranty.

© Solowave Design. All rights reserved.

Part Identification (Reduced Part Size) SW1 - SW5

(2) SL Brace 2 x 2 x 12-1/2"

SW1 **3640620 Box 1**

(1) SW Block 5/4 x 4 x 3-1/2"

SW5 **3644909 Box 1**

Nominal Size	Actual Size
2" x 6"	1½" x 5⅜"
2" x 4"	1⅜" x 3⅜"
2" x 3"	1⅜" x 2½"
2" x 2"	1½" x 1½"
5/4" x 4"	1" x 3½"
5/4" x 5"	1" x 4½"
5/4" x 6"	1" x 5½"
1" x 6"	⅝" x 5⅜"
1" x 5"	⅝" x 4½"
1" x 4"	⅝" x 3⅜"

(1) SL Support 5/4 x 4 x 42-3/4"

SW2 **3640727 Box 1**

(1) SL Upright 5/4 x 4 x 44"

SW3 **3640728 Box 1**

(2) Wall Back 1 x 4 x 46-3/4"

SW4 **3641668 Box 1**

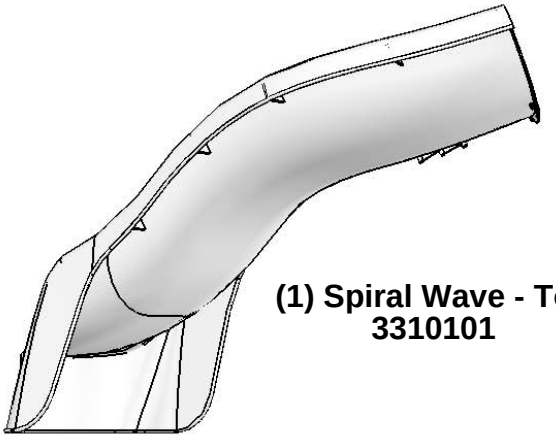

(1) Spiral Wave - Top
3310101

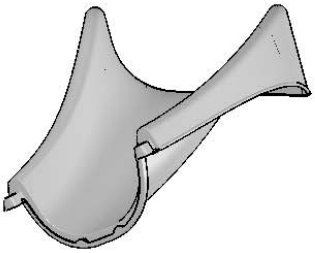

(1) Spiral Wave - Bottom
3310103

Part Identification (Actual Part Size)

LS3

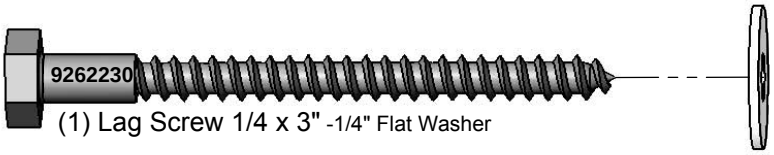

(1) Lag Screw 1/4 x 3" -1/4" Flat Washer

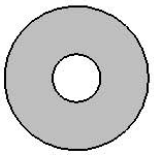

(1)
1/4" Flat Washer
(9251200)

S3

(4) Flat Head Screw #8 x 2 1/2" (9290522)

S6

(6) Pan Screw #12 x 1" (9264610)

S7

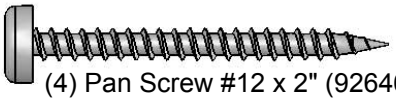

(4) Pan Screw #12 x 2" (9264620)

S8

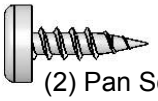

(2) Pan Screw #12 x 3/4" (9224603)

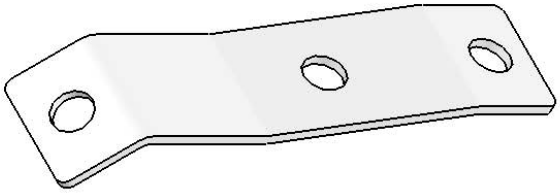

(2) Spiral Wave Brkt
9201500

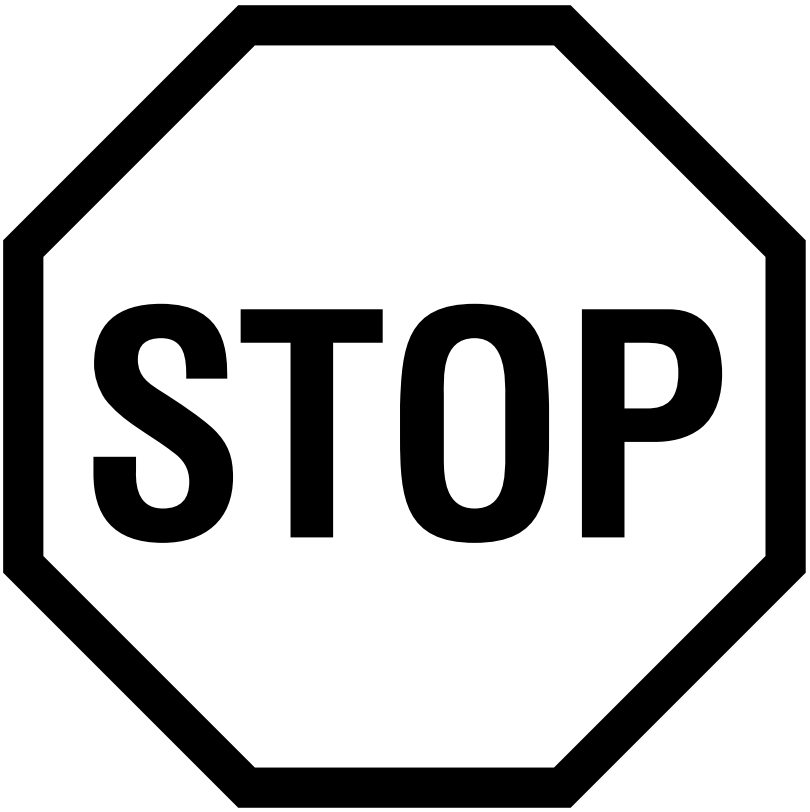

- FILL THIS OUT BEFORE YOU DISCARD YOUR CARTONS
- THE CARTON I.D. STAMP IS LOCATED ON THE END OF EACH CARTON
- YOU WILL NEED THIS INFORMATION IF YOU CALL CONSUMER RELATIONS DEPARTMENT

PRODUCT NUMBER: **A24573E**

CARTON I.D. STAMP: __ __ __ __ __ 14459 ___ (Box 1)
CARTON I.D. STAMP: __ __ __ __ __ 14459 ___ (Box 2)
CARTON I.D. STAMP: __ __ __ __ __ 14459 ___ (Box 3)
CARTON I.D. STAMP: __ __ __ __ __ 14459 ___ (Box 4)
CARTON I.D. STAMP: __ __ __ __ __ 14459 ___ (Box 5)
CARTON I.D. STAMP: __ __ __ __ __ 14459 ___ (Box 6)

THIS IS THE TIME FOR YOU TO SORT, IDENTIFY, AND COUNT ALL YOUR HARDWARE, WOOD PIECES AND ACCESSORIES. THIS WILL ASSIST YOU IN YOUR ASSEMBLY.

WHEN THE PARTS IDENTIFICATION IS COMPLETED, YOU ARE READY TO START ASSEMBLY.

IF YOU NEED ASSISTANCE CONTACT THE CONSUMER RELATIONS DEPARTMENT AT

1-877-966-3738
support@solowavedesign.com

These steps will apply in combination with the Admiral, Balmoral, and Oriana Roof instructions. Use previous steps as reference only:

Step 2
Step 6
Step 14 - 16

Step 2: Wall Assembly

This Step Replaces Step 2 of the Fort Instruction
Continue with Fort Steps 3 to Step 5, then on to Step 6 from this Instruction

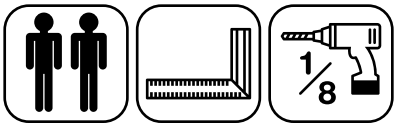

Note: Pre-drill all holes using a 1/8" drill bit before installing the lag screws.

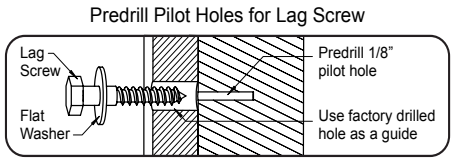

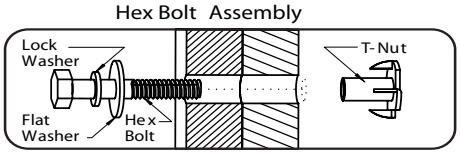

A: To 2 (F13) Posts attach 1 (F8) SL Ground with 4 (H2) 1/4 x 2" Hex Bolts (with lock washer, flat washer and t-nut) and in 1 (F17) End Floor in the top holes with 2 (H2) 1/4 x 2" Hex Bolts (with lock washer, flat washer and t-nut). (fig. 2.1)

B: Make sure assembly is square and then in the bottom holes of the (F17) End Floor fasten to (F13) Posts using 2 (LS1) 1/4 x 1-1/2" Lag Screws (with flat washer). (fig. 2.2)

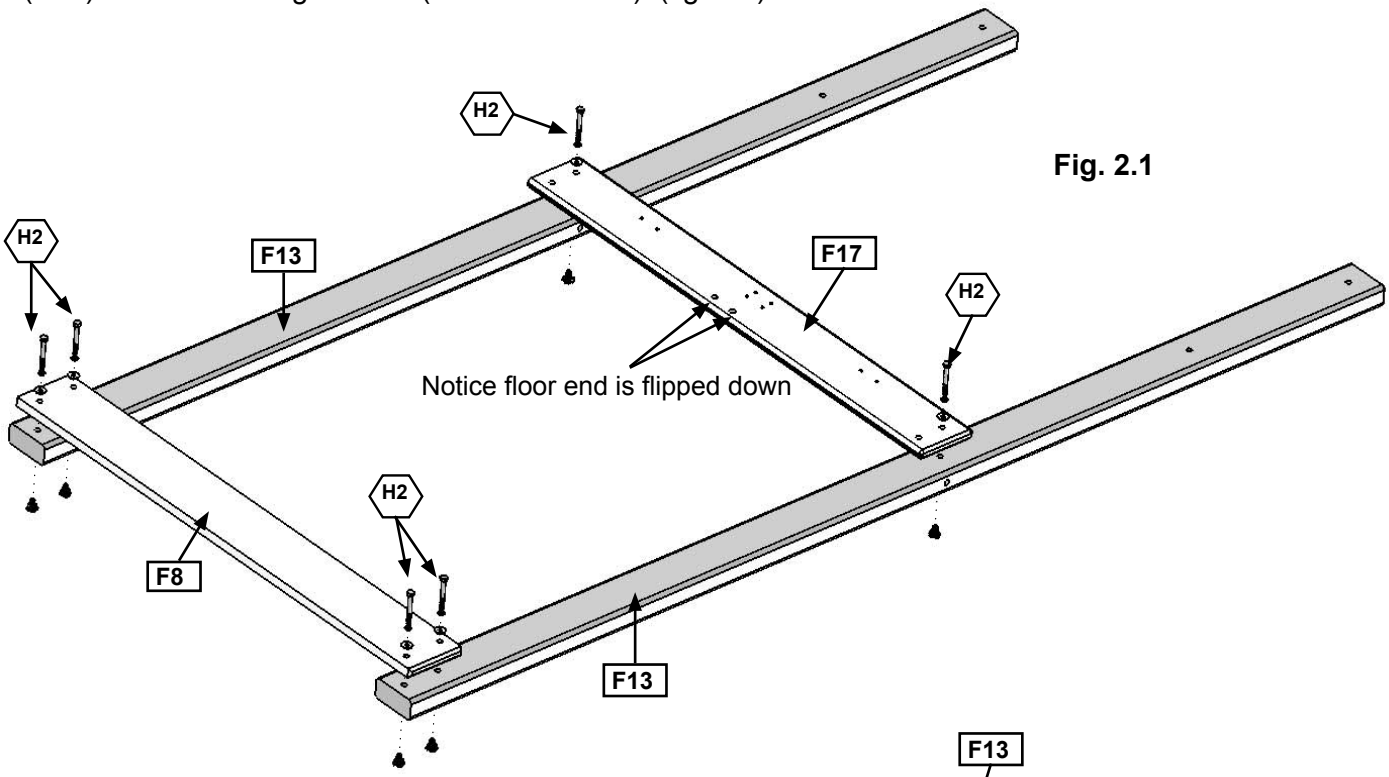

Fig. 2.1

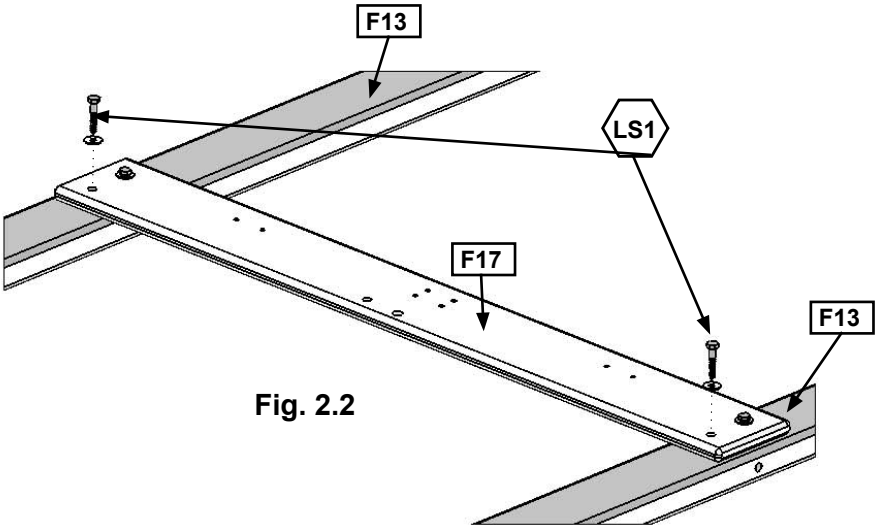

Fig. 2.2

Wood Parts

- 1x F17 End Floor 1 x 5 x 38-1/4"
- 1x F8 SL Ground 1 x 5 x 38-1/4"
- 2x F13 Post 2 x 4 x 83"

Hardware

- 6 x H2 1/4 x 2" Hex Bolt (1/4" lock washer, 1/4" flat washer, 1/4" t-nut)
- 2 x LS1 1/4 x 1-1/2" Lag Screw (1/4" flat washer)

Step 6: Floor Frame Assembly

This Step Replaces Step 6 of the Fort Instruction
Continue with Fort Steps 7 to Step 13, then on to Step 14 from this Instruction

A: From inside of assembly, measure 2-1/8” down from the top of (F17) End Floor on the Swing Wall side (fig. 6.2) and 5/8” down from the top of (F17) End Floor on the Wall side (fig. 6.3), then attach (AR11, BR5 or OR7) Floor Joist using 2 (S4) #8 x 3” Wood Screws per end. (fig. 6.1)

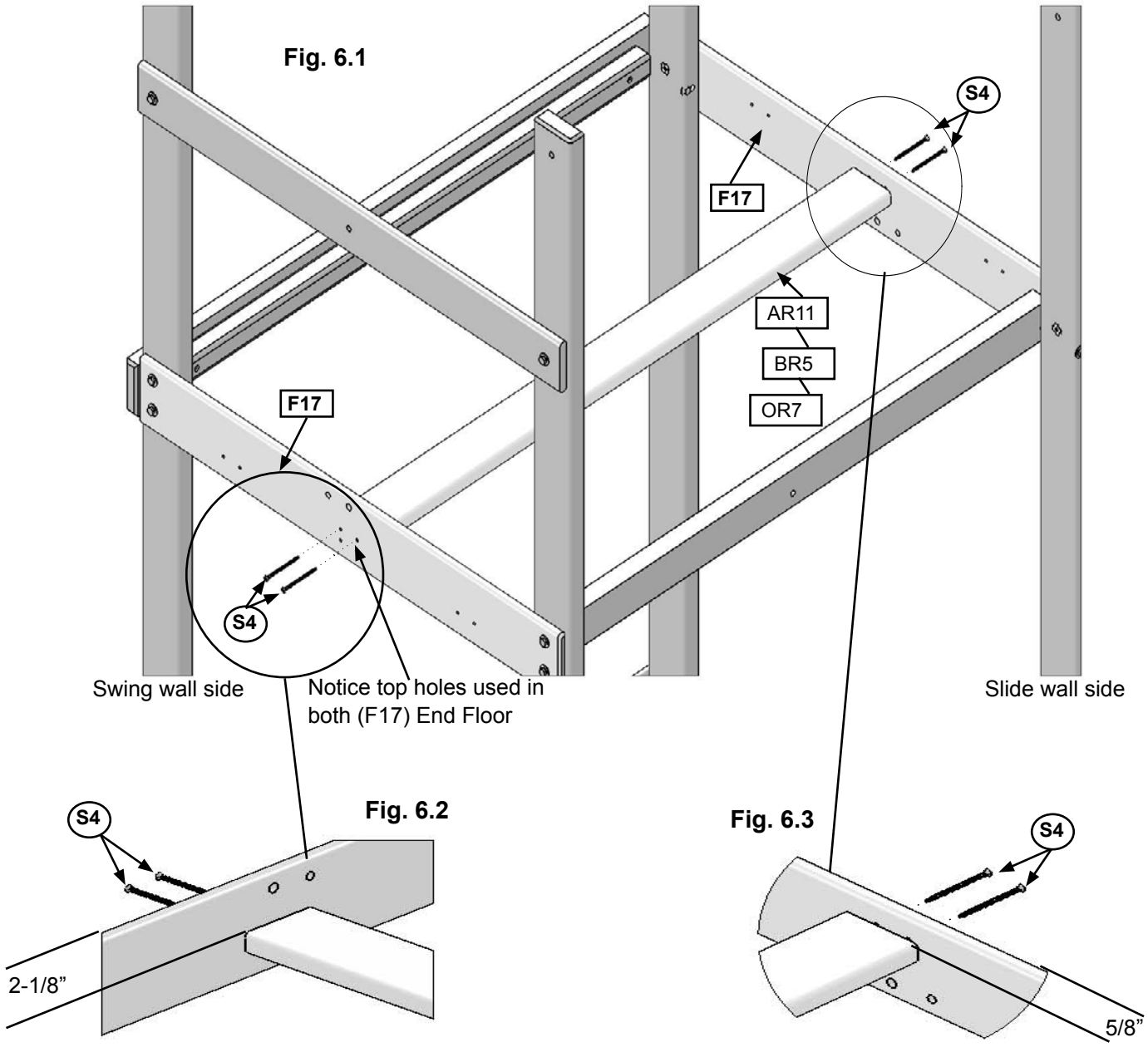

Wood Parts

1 x AR11 **Floor Joist 5/4 x 4 x 46-1/2”**

Hardware

4 x S4 **#8x 3” Wood Screw**

Step 14: Front Frame Assembly

This Step Replaces Step 14 of the Fort Instruction
Continue with Step 15 from this Instruction

A: Remove (F7) Wall Board as indicated in fig. 14.1. This board will be re-attached in Step 15. Be sure to keep the board and the screws handy.

B: Attach either (OR2) Front Divider or (AR6) Front Divider to (F12) Floor Front with 1 (H2) 1/4 x 2” Hex Bolt (with lock washer, flat washer and t-nut) and to (F15) Front Top with 1 (PB2) 1/4 x 1-1/4” Pan Bolt (with lock washer, flat washer and t-nut). (fig. 14.2) OR Attach (BR8) Roof Upright to (F12) Floor Front with 1 (H12) 1/4 x 3” Hex Bolt (with lock washer, flat washer and t-nut) and to (F15) Front Top using 1 (H2) 1/4 x 2” Hex Bolt (with lock washer, flat washer and t-nut). Make sure the Front Divider or Roof Upright is flush to the bottom of (F12) Floor Front. (fig. 14.2 & 14.3) **Keep bolts loose.**

C: Flush to the top and outside edges of each (F13) Post attach (F15) Front Top with 4 (S7) #12 x 2” Pan Screws (with 3/16” flat washer). (fig. 14.1)

D: Tight to the floor boards and flush to the outside edges of the (F13) Posts attach 1 (SW4) Wall Back to each (F13) Post with 4 (S1) #8 x 1-1/8” Wood Screws. (fig. 14.1)

E: Measure 21-1/4” up from the floor boards on each side of the fort and attach 1 (SW4) Wall Back to each (F13) Post with 2 (S7) #12 x 2” Pan Screws (with 3/16” flat washer) in the top holes and 2 (S1) #8 x 1-1/8” Wood Screws in the bottom holes . (SW4) Wall Back should be tight to (F14) Wall Support. (fig. 14.1)

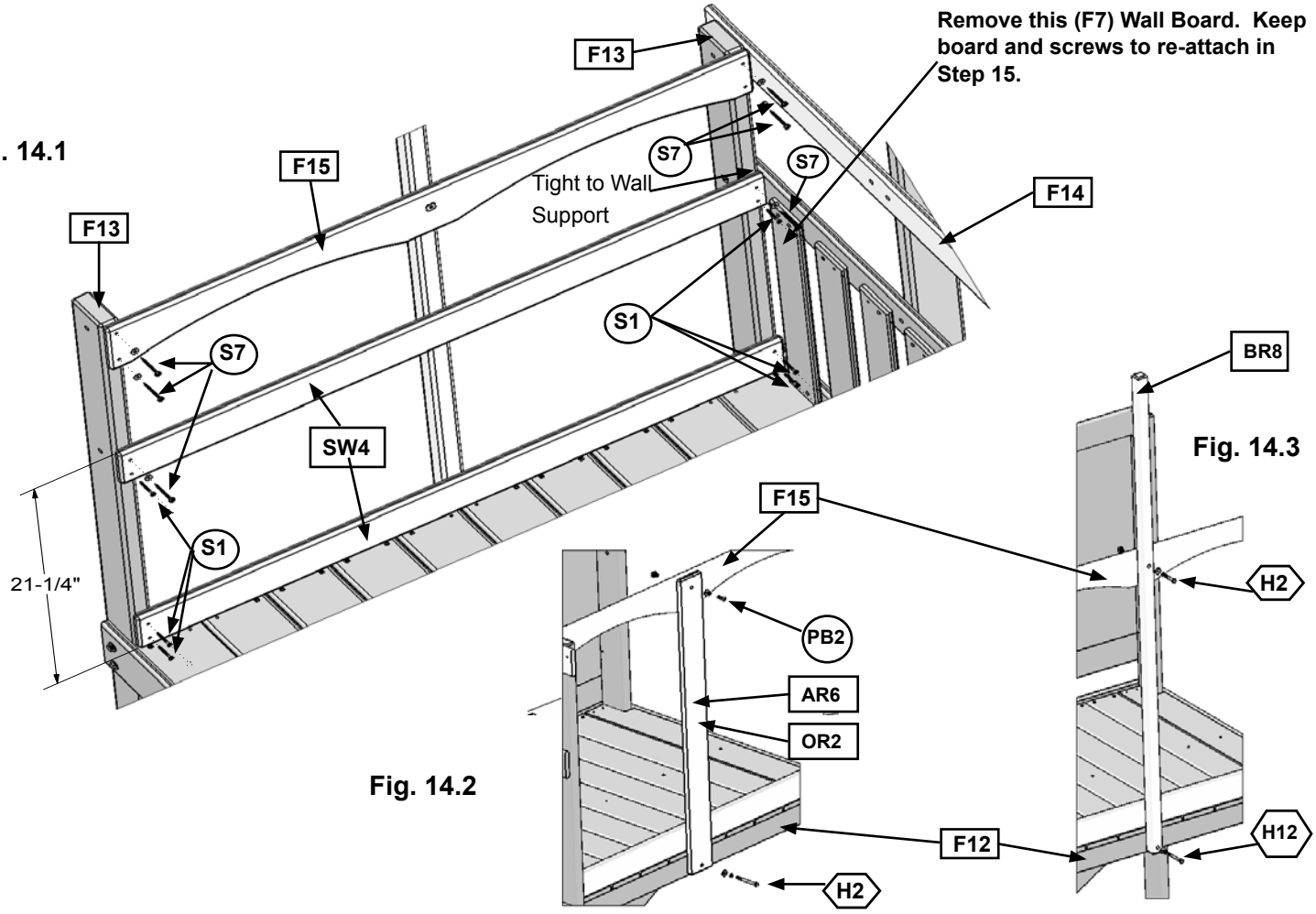

Fig. 14.1

Fig. 14.2

Fig. 14.3

Wood Parts

1 x F15 Front Top 1 x 5 x 46-1/2”
2 x SW4 Side Roof 1 x 4 x 46-3/4”

Hardware

6 x S7 #12 x 2” Pan Screw (with 3/16” flat wsher)
6 x S1 #8 x 1-1/8” Wood Screws
1 x H2 1/4 x 2” Hex Bolt (1/4” lock washer, 1/4” flat washer, 1/4” t-nut)
1 x H12 1/4 x 3” Hex Bolt (1/4” lock washer, 1/4” flat washer, 1/4” t-nut)
OR
1 x PB2 1/4 x 1-1/4” Pan Bolt (1/4” lock washer, 1/4” flat washer, 1/4” t-nut)

Step 15: Front Wall Assembly

This Step Replaces Step 15 of the Fort Instruction
Continue with Step 16 from this Instruction

A: Tight to the floor boards with the bevelled edges facing out and to the top, attach 13 (F5) Cedar Walls against each (SW4) Wall Back using 4 (S0) #8 x 7/8" Truss Screws per (F5) Cedar Wall. The 2 outside boards should be flush to outside edge of each (F13) Post. The boards should be evenly spaced with the gap between boards 1/4", not exceeding 1/2". (fig. 15.1 & 15.2)

B: Re-attached (F7) Wall Board from Step 16 tight to the last (F5) Cedar Wall. (fig. 15.1)

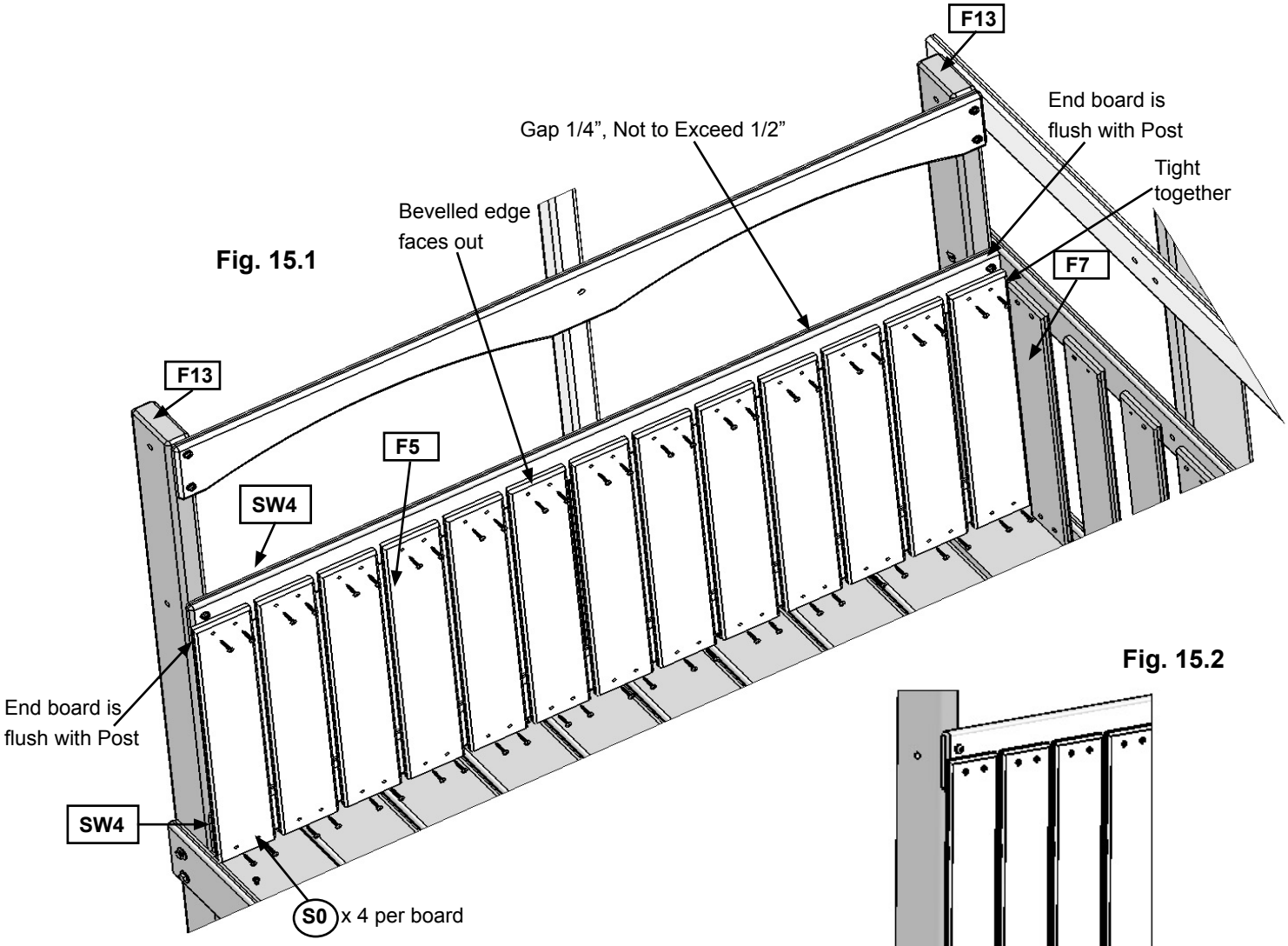

Fig. 15.1

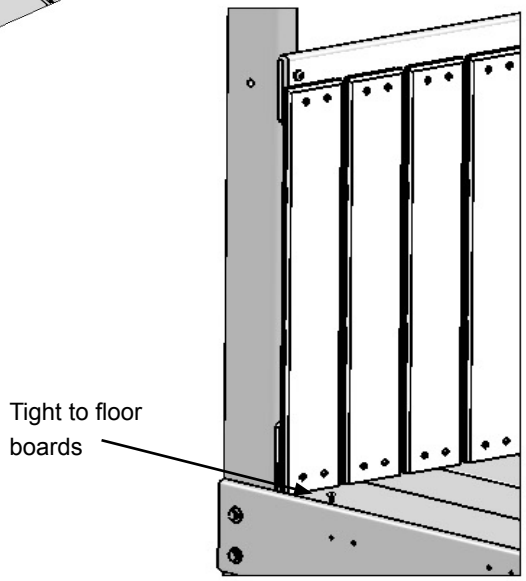

Fig. 15.2

Wood Parts	Hardware
13 x F5 CE Wall Board 1/2 x 4 x 20"	52 x S0 #8 x 7/8" Truss Screw

Step 16: Wall Assembly

This Step Works in Combination with Step 16 of the Fort Instruction
Continue with Fort Steps 17 to Step 21, then on to Step 22 from this Instruction,
For Oriana, continue with Step 17 in this instruction

A: Use Step 16 of your fort specific manual to install the (OR14, BR9 or AR18) Roof Side or Side Roof.

B: Install 2 (PB2) 1/4 x 3/4" Pan Bolts (with lock washer, flat washer and t-nut) into (F17) End Floor. The bolts are installed from the outside of the fort and t-nuts are installed from the inside of the fort. (fig. 16.1 & 16.2)

C: Install 2 Hole Plugs on each (F13) Post, 1 Hole Plug per side in each hole as shown in fig. 16.1, 16.3 & 16.4.

Note: Keep the opening clear, do not install any other boards in this step and do not follow Step 16 cont. Proceed to Step 17.

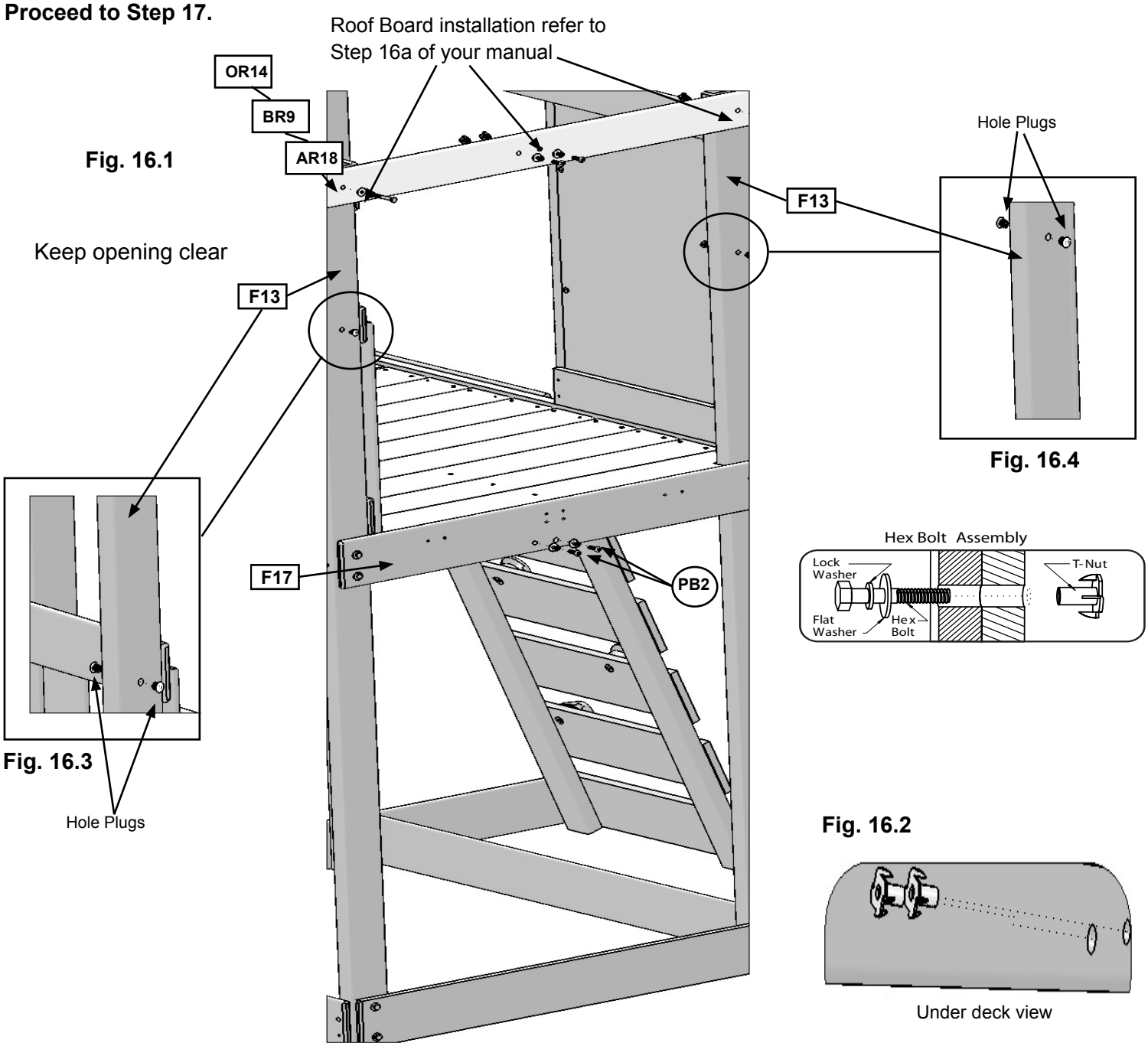

Hardware

2 x (PB2) **1/4 x 3/4" Pan Bolt (1/4" lock washer, 1/4" flat washer, 1/4" t-nut)**

Other Parts

4 x Hole Plugs

Step 17: Roof Frame Assembly

This Step Replaces Step 17 of the Oriana Fort Instruction
Continue with Fort Steps 18 to Step 21, then on to Step 22 from this Instruction

A: Square and attach (OR13) Roof Support on the outside of (OR14) Side Roof with 1 (H1) 1/4 x 1-1/2" Hex Bolts (with lock washer, flat washer and t-nut) as shown in fig. 17.1.

B: Attach (OR11) Roof Ridge flush to outside edge of (OR10) SW Mount and to (OR13) Roof Support with 4 (S3) #8 x 2-1/2" Wood Screws as shown in fig. 17.1. There should be a 2 degree flare out from (OR11) Roof Ridge to (OR13) Roof Support as shown in fig. 17.2.

C: Pre-drill pilot holes for the screws using a 1/8" drill bit and then attach 1 (OR12) Tarp Front Back to each end of each (OR14) Side Roof, making sure the pilot holes are centred on the end of (OR14) Side Roof, with 4 (S2) #8 x 1-1/2" Wood Screws per (OR12) Tarp Front Back. The top of (OR12) should be flush to the top of (OR14) Side Roof. (fig. 17.1)

D: At all 4 corners attach 1 Corner Brace using the hardware provided as shown in (fig.17.1 & 17.3).

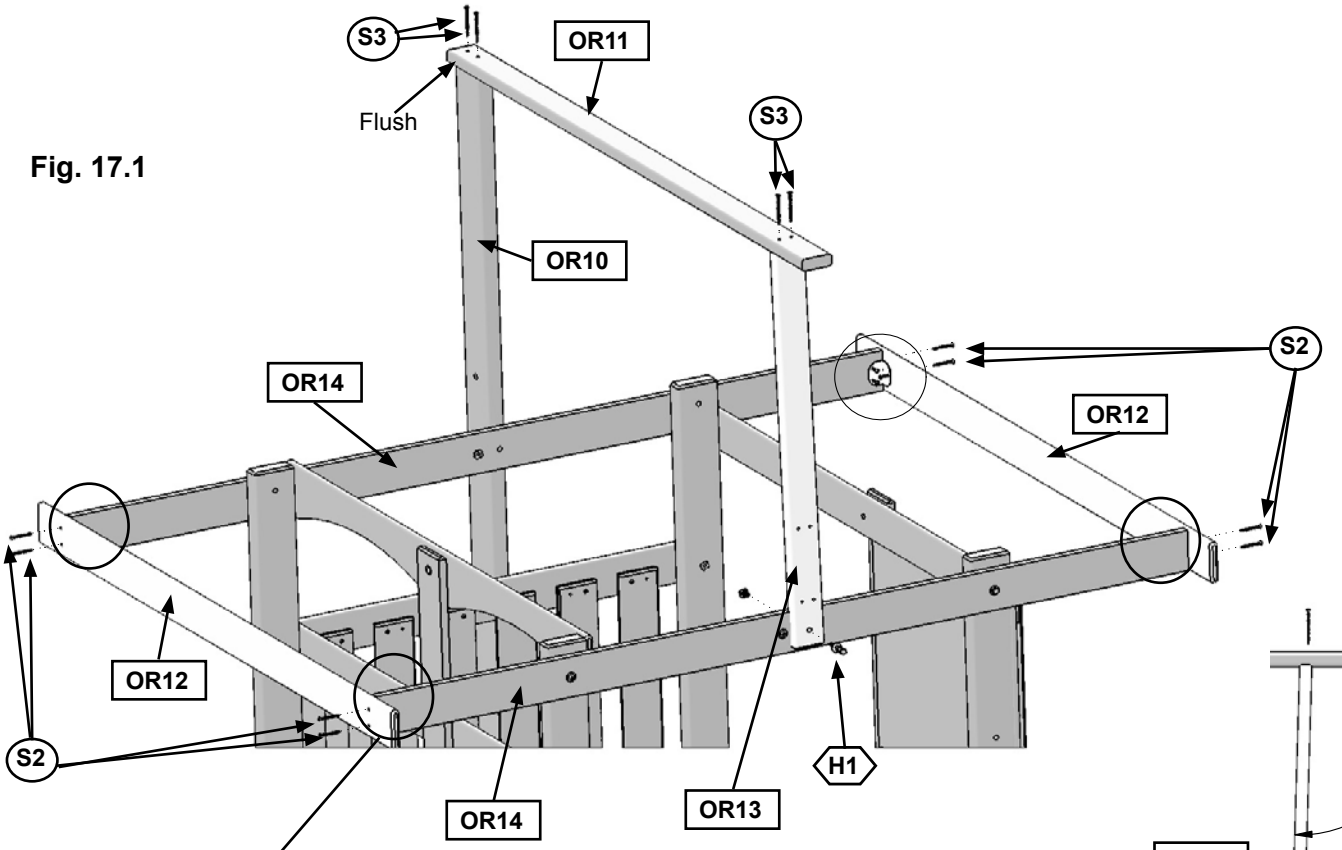

Fig. 17.1

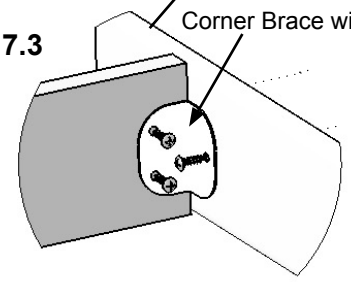

Fig. 17.3

x 4 per board

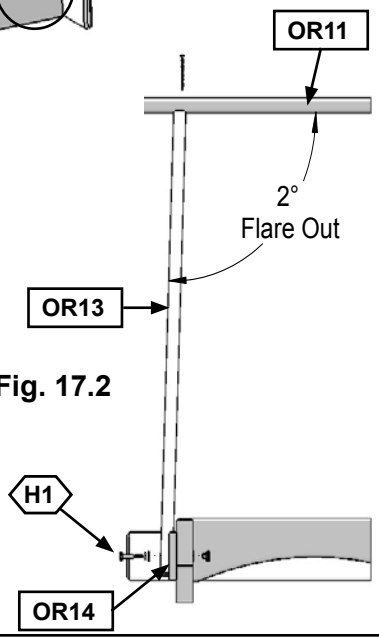

Fig. 17.2

Wood Parts	Hardware	Other Parts
1 x OR11 Roof Ridge 5/4 x 3 x 55"	4 x S3 #8 x 2-1/2" Wood Screw	4 x Corner Brace (with hardware)
2 x OR12 Tarp Front Back 1 x 4 x 55"	8 x S2 #8 x 1-1/2" Wood Screw	
1 x OR13 Roof Support 5/4 x 3 x 33"	1 x H1 1/4 x 1-1/2" Hex Bolt (1/4" lock washer, 1/4" flat washer, 1/4" t-nut)	

Step 22: Assemble Slide Supports

A: Attach (SW5) SW Block to (SW3) SL Upright using 2 (S3) #8 x 2-1/2” Wood Screws. (fig. 22.1)

B: Attach (SW2) SL Support to (SW3) SL Upright with 2 (S3) #8 x 2-1/2” Wood Screws. (fig. 22.1)

Fig. 22.2

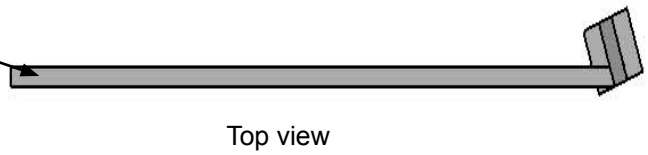

Fig. 22.1

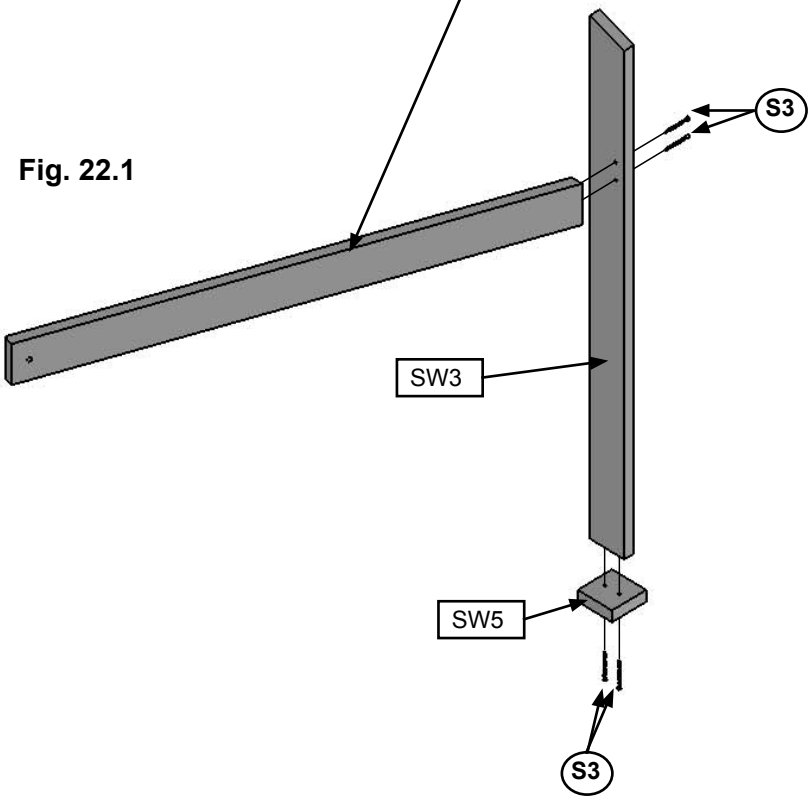

Wood Parts

- 1 x SW2 **SL Support 5/4 x 4 x 42-3/4”**
- 1 x SW3 **SL Upright 5/4 x 4 x 44”**
- 1 x SW5 **SW Block 5/4 x 4 x 3-1/2”**

Hardware

- 4 x S3 **#8 x 2-1/2” Wood Screw**

Step 23: Assemble Sprial Wave Slide

A: Assemble the top and bottom sections using the tongue and groove as a guide. Push together until snaps engage. (fig. 23.1 & 23.3)

B: Complete subassembly by securing sections with 2 (S8) #12 x 3/4" Pan Screws per section in the middle holes and 2 (S6) #12 x 1" Pan Screws per section in the outside holes. See fig. 23.3 for accurate screw placement.

Fig. 23.1

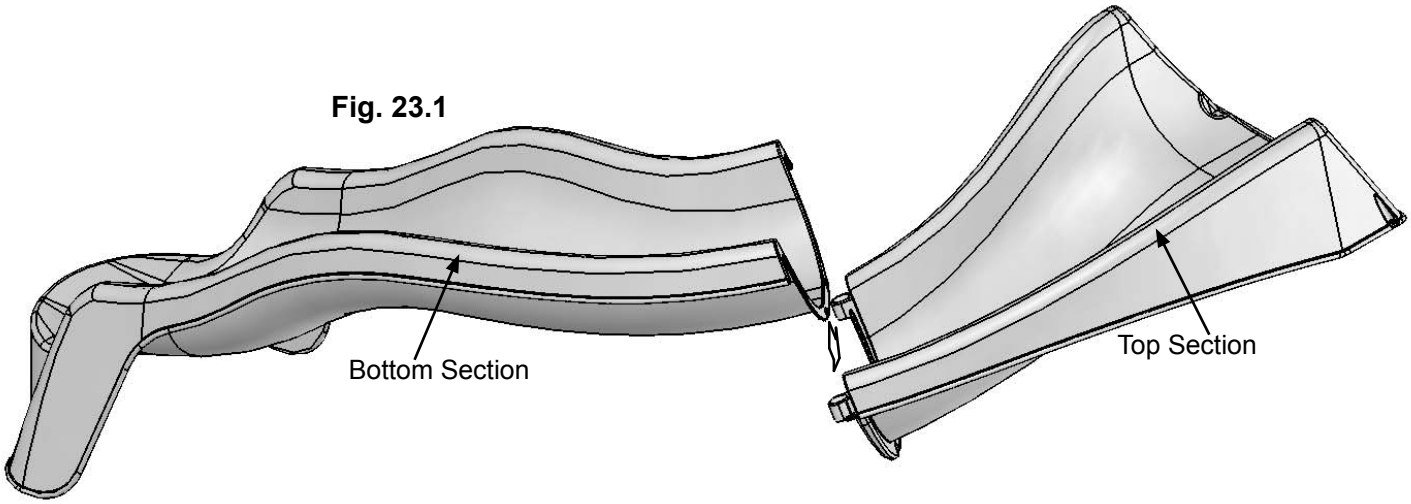

Fig. 23.3

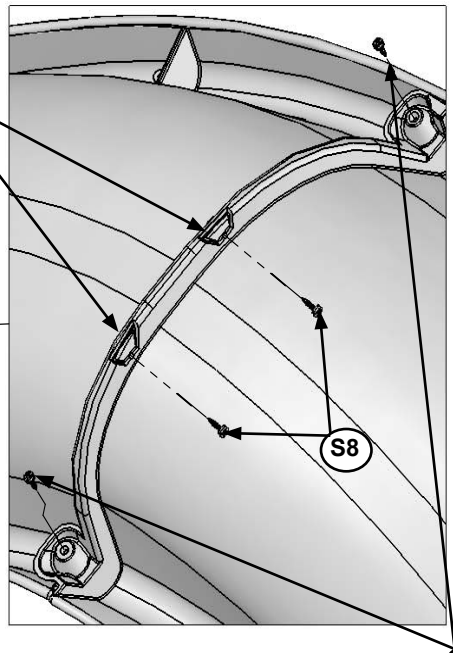

Fig. 23.2

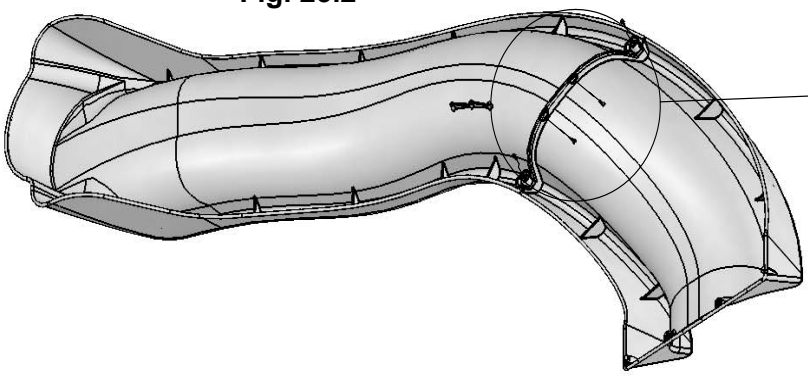

Hardware	Other Parts
2 x (S8) #12 x 3/4" Pan Screw	1 x Bottom Section
2 x (S6) #12 x 1" Pan Screw	1 x Top Section

Step 24: Attach Slide Supports to Fort

A: Dig a flat bottom, 8” wide by 6-1/2” deep hole, 41” away from the fort as shown in fig. 24.1. Place Slide Support Assembly in the hole, making sure that it is level and plumb with (F13) Post. Drill 1/8” pilot hole and attach to fort with 1 (LS3) 1/4 x 3” Lag Screw (with flat washer). (fig. 24.1)

B: Refill the hole halfway with soil and compact making sure (SW2) SL Support stays level and plumb with fort. Finish filling and compacting. (fig. 24.1)

Warning! Digging can be dangerous. Please check for underground wiring, cables and or gas lines before proceeding.

DO NOT USE CONCRETE TO ANCHOR UPRIGHTS!

Fig. 24.1

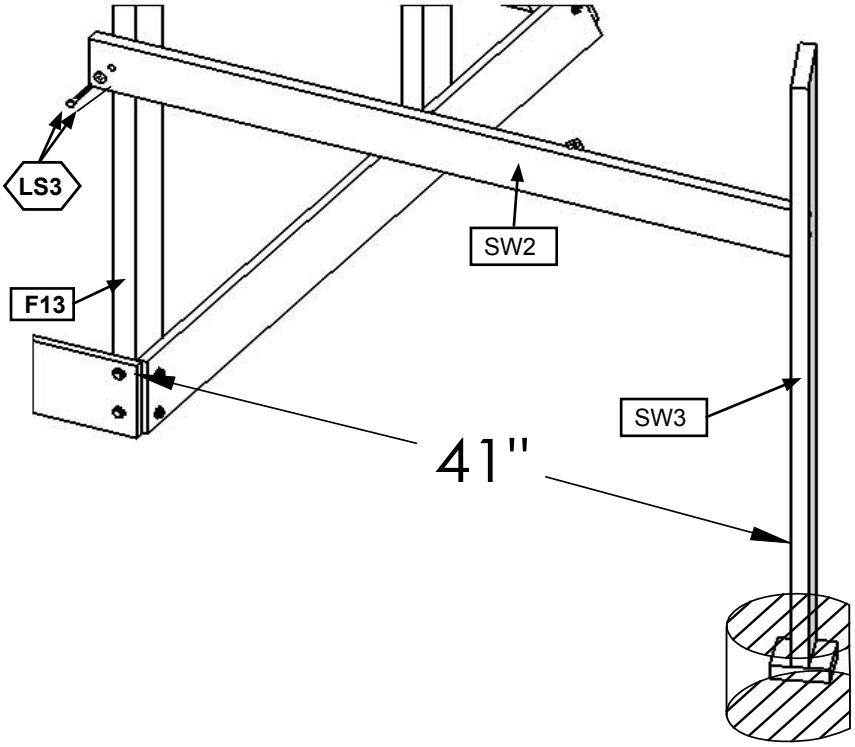

Hardware

1 x LS3 1/4 x 3” Lag Screw (1/4” flat washer)

Step 25: Attach Slide to Fort and Supports

Pre-drill all pilot holes using a 1/8" drill bit before installing pan screws.

A: Place Slide in the centre between (F13) Posts on the Wall Assembly opening and pre-drill 1/8" pilot holes through the (F6) Cedar Gap Board using the slide holes as a guide.. (fig. 25.1)

B: Attach Slide to (F6) Cedar Gap Board and to 2 (SW1) SL Braces with 4 (S7) #12 x 2" Pan Screws (2 per brace) as shown in fig. 25.1 & 25.2.

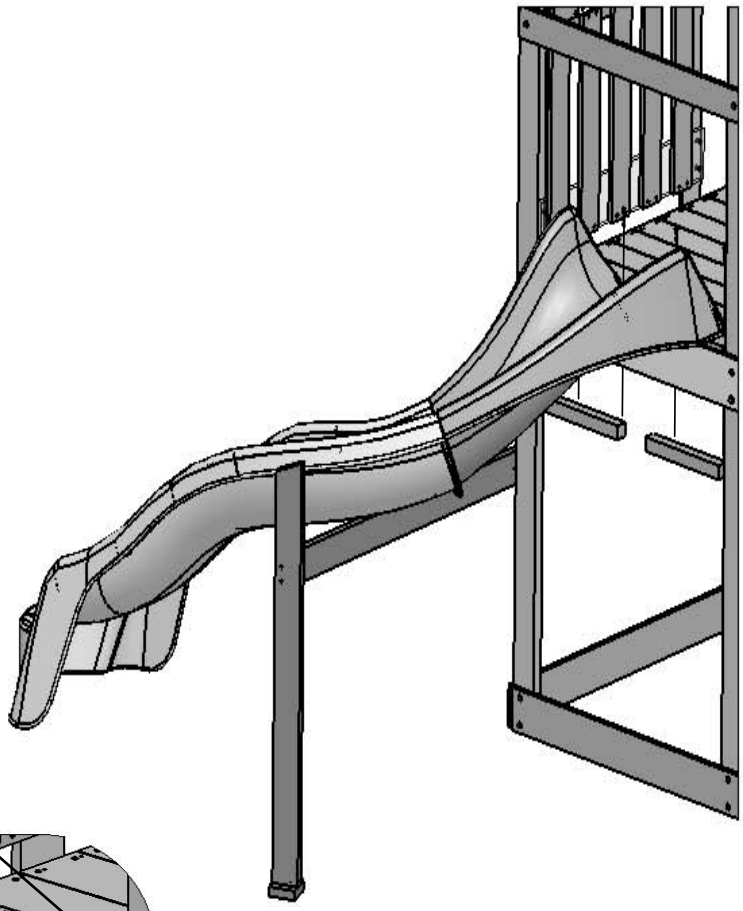

Fig. 25.1

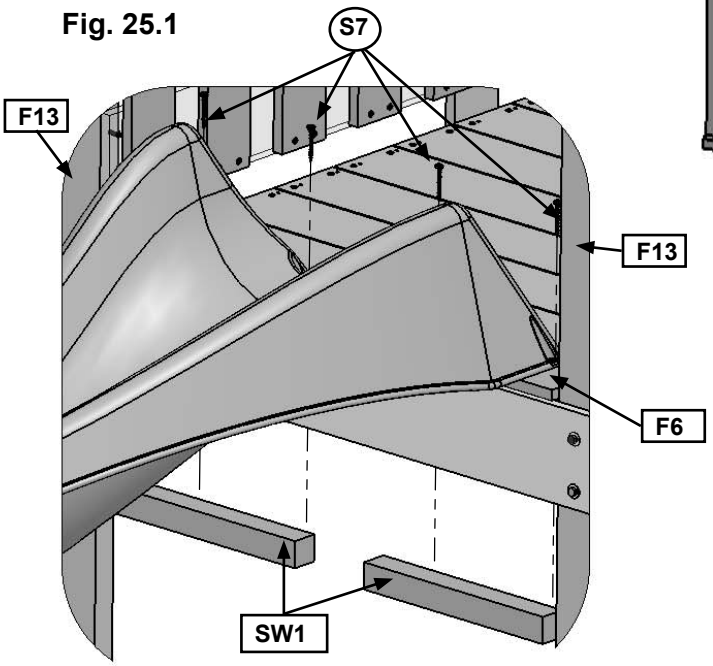

Fig. 25.2

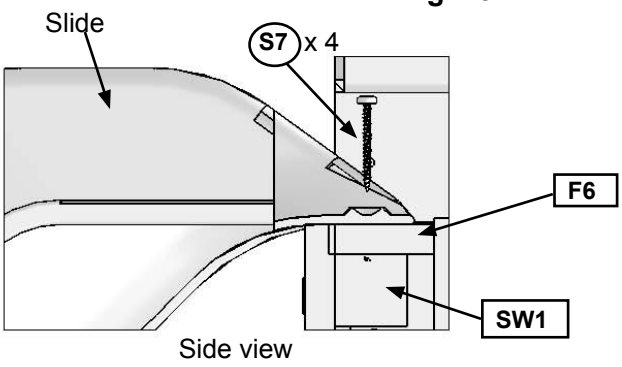

Wood Parts

2 x SW1 **SL Brace 2 x 2 x 12-1/2"**

Hardware

4 x S7 **#12 x 2" Pan Screw**

Step 26: Attach Spiral Wave Brackets

A: Align (SW3) SL Upright between holes on underside of slide and attach to slide using 1 Spiral Wave Bracket with 2 (S6) #12 x 1” Pan Screws as shown in fig. 26.1 & 26.3

B: Attach (SW2) SL Support to slide using 1 Spiral Wave Bracket with 2 (S6) #12 x 1” Pan Screws into the slide as shown in fig. 26.1 & 26.2.

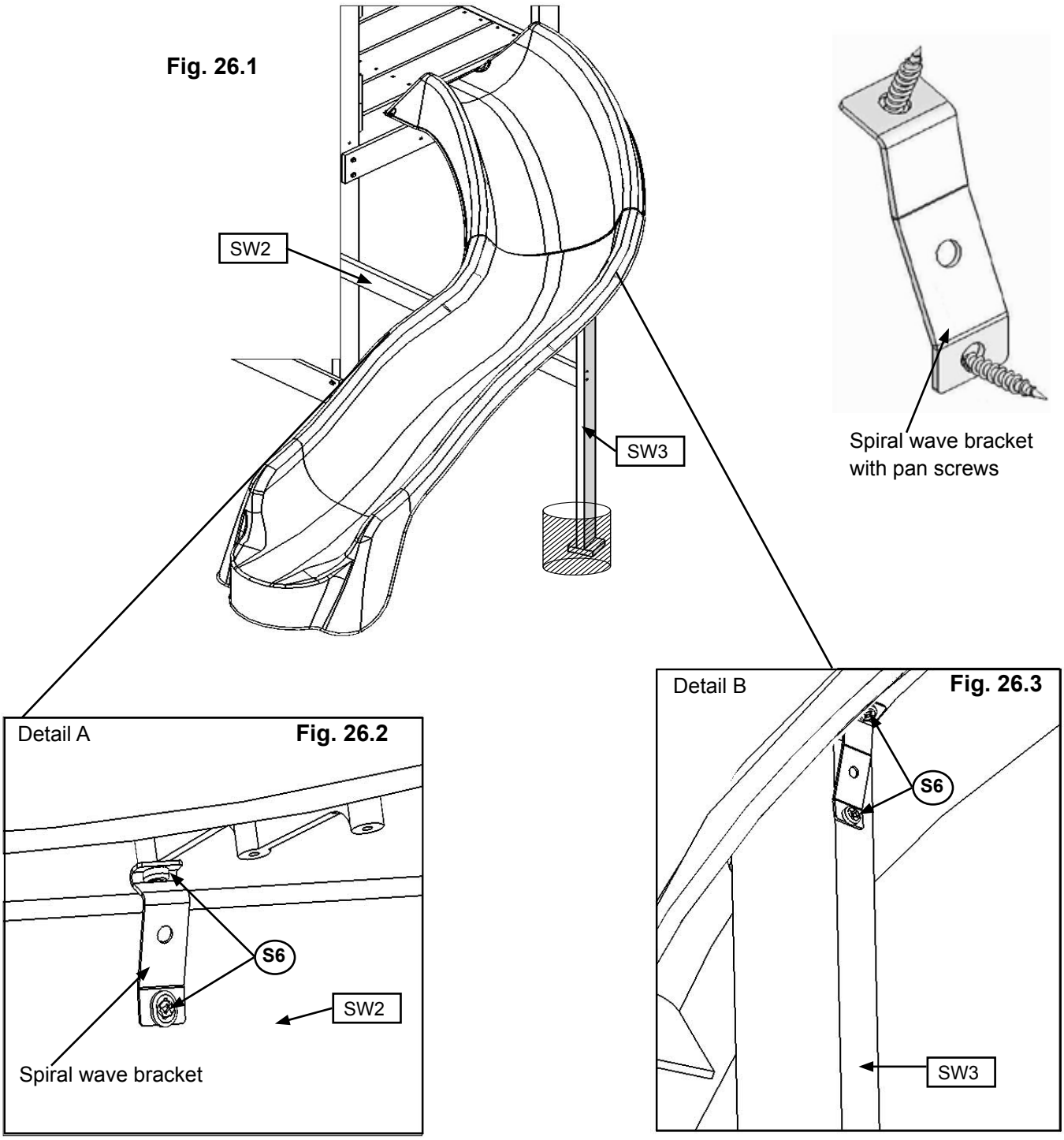

Hardware	Other Parts
4 x (S6) #12 x 1” Pan Screw	2 x Spiral Wave Bracket

NOTES

NOTES

NOTES

BIG BACKYARD

Consumer Registration Card

First Name | Initial | Last Name

Street | Apt. No.

City | State/Province | ZIP/Postal Code

Country | Telephone Number

E-Mail Address

Model Name | Model Number (Box Labels)

Serial Number (on ID Plaque)

Date Purchase | Purchased From

MM / DD / YY

How would you rate this product for quality?

☐ Excellent ☐ Very Good ☐ Average ☐ Below Average ☐ Poor

How would you rate this product for ease of assembly?

☐ Excellent ☐ Very Good ☐ Average ☐ Below Average ☐ Poor

How would you rate our instructions?

☐ Excellent ☐ Very Good ☐ Average ☐ Below Average ☐ Poor

How would you rate the quality of packaging?

☐ Excellent ☐ Very Good ☐ Average ☐ Below Average ☐ Poor

Would you recommend the purchase of our products to friends and family?

☐ Yes ☐ No

Comments:

MAIL TO:
Solowave Design™
375 Sligo Road W.
Mount Forest, Ontario, Canada
N0G 2L1
Attention: Customer Service

REVISION: 12/01/09

Fill out your registration card online at
www.bigbackyard.com/ownerslounge

Big Backyard would like to say Thank You for your time and feedback.

CUT ALONG LINE